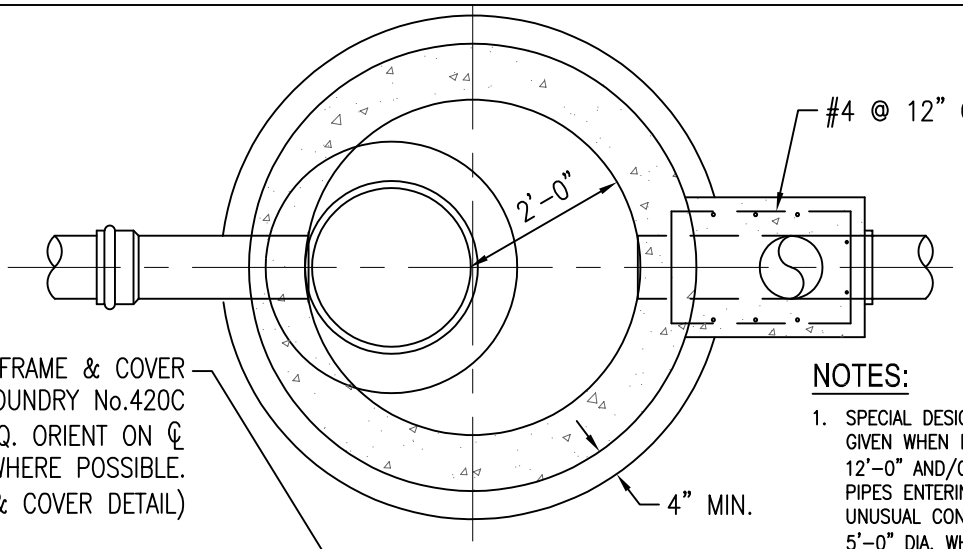

CAST IRON MANHOLE FRAME & COVER U.S. FOUNDRY No.420C OR APPROVED EQ. ORIENT ON ℄ OF STREET WHERE POSSIBLE. (SEE MANHOLE FRAME & COVER DETAIL)

PLAN

NOTES:

1. SPECIAL DESIGN CONSIDERATION SHOULD BE GIVEN WHEN DEPTH OF COVER EXCEEDS 12'-0" AND/OR THE SIZE AND NUMBER OF PIPES ENTERING THE MANHOLE RESULTS IN UNUSUAL CONDITIONS. MANHOLE SHALL BE 5'-0" DIA. WHEN DEPTH EXCEEDS 12'-0".
2. ALL REQUIREMENTS FOR ECCENTRIC PRECAST MANHOLES APPLY TO PRECAST OUTSIDE DROP MANHOLES.

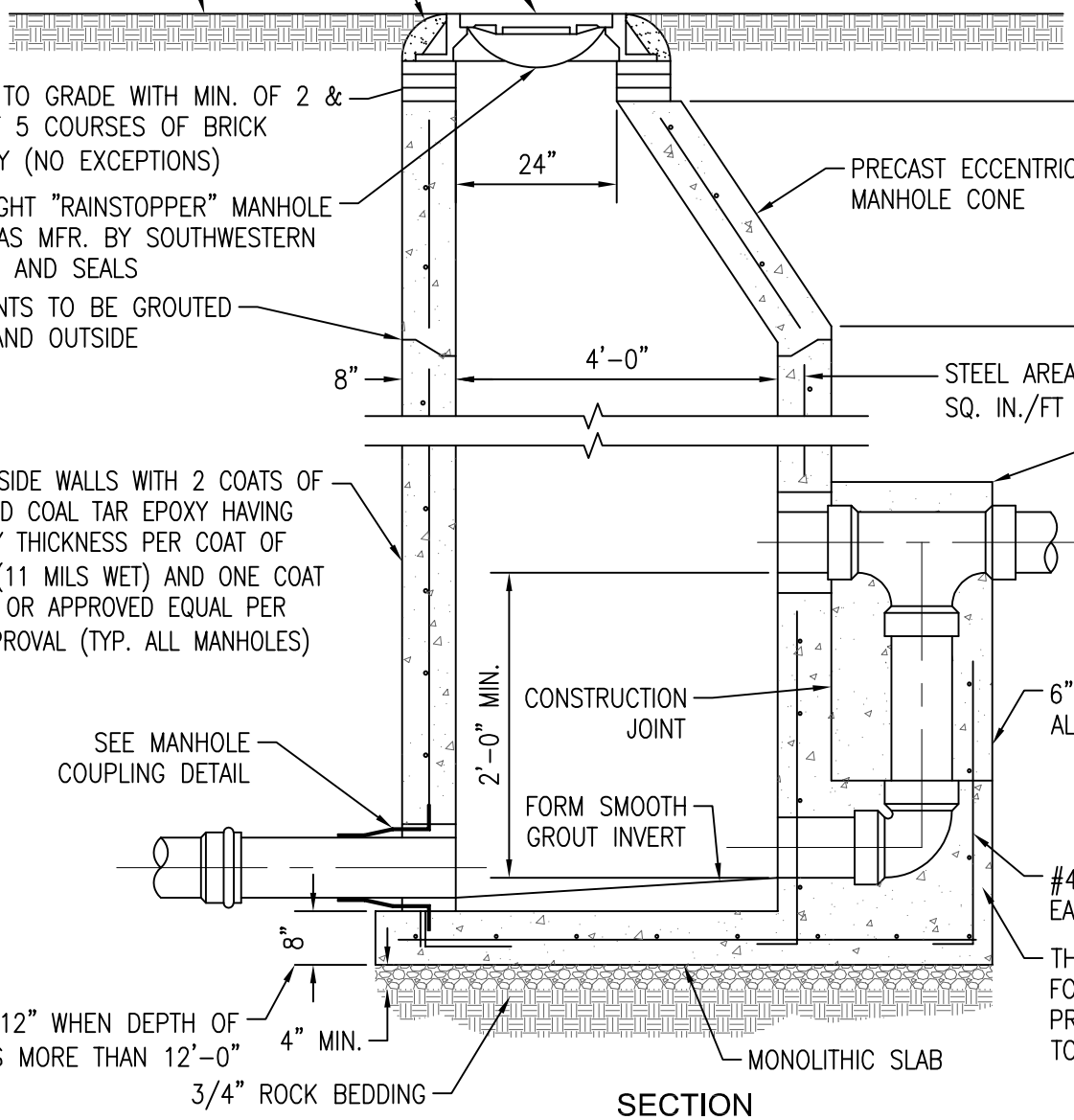

SECTION

CITY OF PEMBROKE PINES ENGINEERING/UTILITIES DIVISION		STANDARD SANITARY SEWER DETAIL	S-3
APPROVED: J.M.	REVISED:	PRECAST OUTSIDE DROP MANHOLE	
DATE: 11/05/99	02/06/23		