CITY OF PEMBROKE PINES
ENGINEERING/UTILITIES DIVISION

APPROVED: J.M.
DATE: 11/05/99

REVISED:

STANDARD ROAD DETAIL

110' PUBLIC ROAD
6 LANES - ARTERIAL

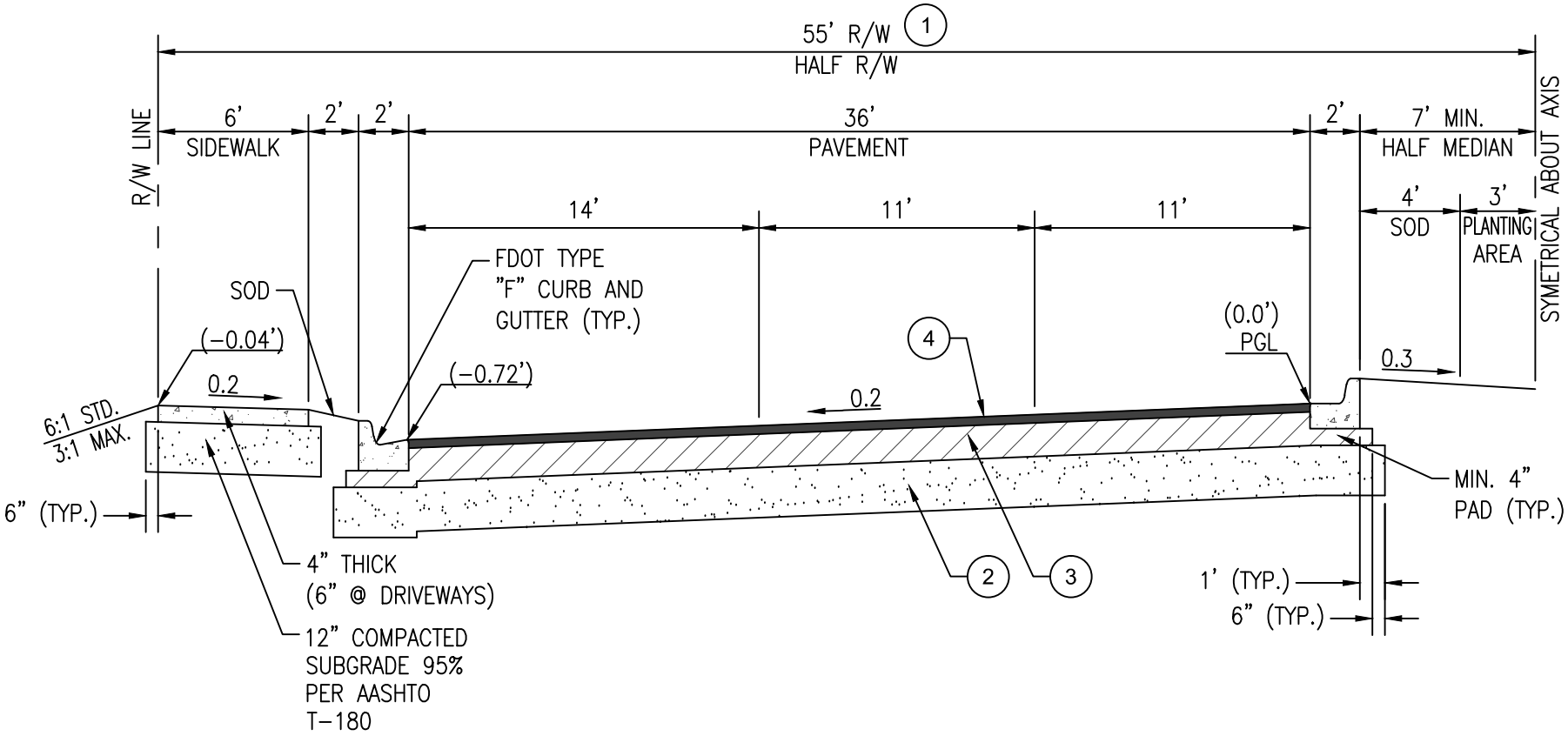

NOTES:

1. THE ENTIRE WIDTH OF THE R/W SHALL BE DEMUCKED. NO A-5, A-7, OR A-8 MATERIAL WILL BE ALLOWED.
2. STABILIZED SUBGRADE, MIN. LBR OF 40, COMPACTED AT 95% MAXIMUM DENSITY PER AASHTO T-180.
3. LIMEROCK BASE, MIN. LBR OF 100 WITH 60% OR MORE CALCIUM CARBONATE CONTENT, COMPACTED TO 98% MAX. DENSITY PER AASHTO T-180 AND PRIMED.
4. ASPHALTIC CONCRETE TYPE S-III MODIFIED MIN. 2" COMPACTED FDOT DESIGN MIX-IN TWO LIFTS. 1-1/4" TYPE S-I (BOTTOM), 3/4" TYPE S-III (TOP).
5. ALL PAVEMENT MARKINGS TO BE THERMOPLASTIC.
6. ALL DIMENSIONS SHOWN ARE MINIMUM REQUIREMENTS.

GREAT SEAL OF THE CITY OF PEMBROKE PINES FLORIDA
JOIN US - PROGRESS WITH US

R-8